# Practical Network Defense

*Master's degree in Cybersecurity 2025-26*

# Network traffic regulation with firewalls

*Angelo Spognardi*
*spognardi@di.uniroma1.it*
*Dipartimento di Informatica*
*Sapienza Università di Roma*

# Today's agenda

- Traffic regulation
  - Packet filtering
- Filter rules
- Stateful firewall
- Other types of firewall
  - Application-level filtering
  - Circuit-level gateway

# Traffic regulation

# Regulate traffic: routers and firewalls

- A router is a device that connects two networks
- A firewall is a device that besides acting as a router, also contains (and implements) rules to determine whether packets are allowed to travel from one network to another
  - Router also can perform some form of screening (packet filter)

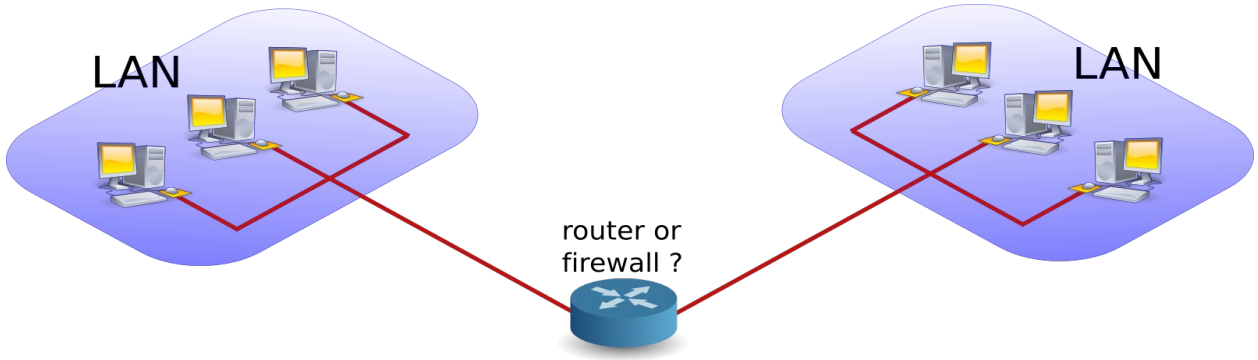

# Why firewalls?

- Restricts access from the outside
  - Internet = millions of people together → bad things happen
- Prevents attackers from getting too close
- Restricts people from leaving

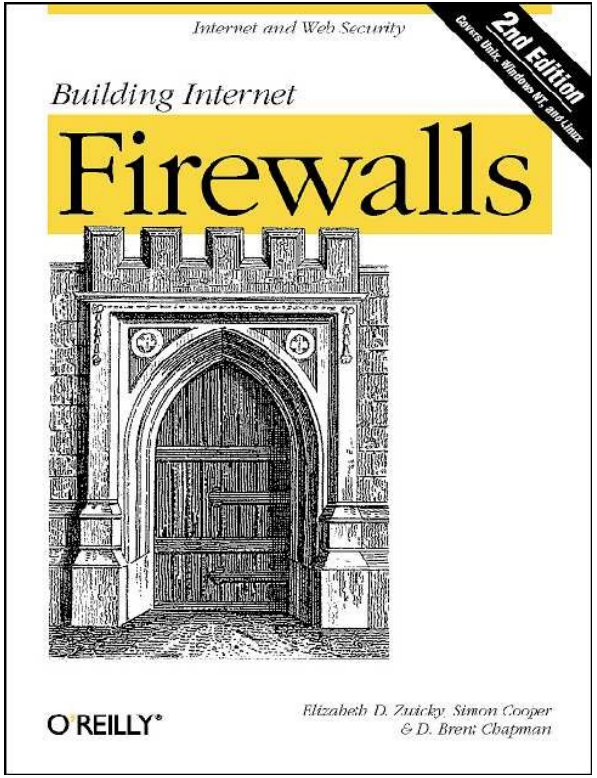

# Secure traffic regulation

- To attain a certain level of network security, you can:
  - Regulate which traffic is allowed (sources, destinations, services, ...)
  - Protect the traffic by encryption
  - Monitor the traffic for "bad behaviour"
  - Monitor the hosts for "bad behaviour"
- The choice will depend on the security policy to be fulfilled (particularly the CIA targets).

# Firewall Design & Architecture Issues

- Least privilege
- Defense in depth
- Choke point
- Weakest links
- Fail-safe stance
- Universal participation
- Diversity of defense
- Simplicity

# Host based packet filters

- Kind of firewall that disciplines the traffic in/out a single host
- It specifies the packets that can be received and sent
  - Ex: iptables, windows firewall and all the so called "personal firewalls"
- Vendor products generally work per-app: each installed application has a known policy that has to obey

# Screening router (ACL-based)

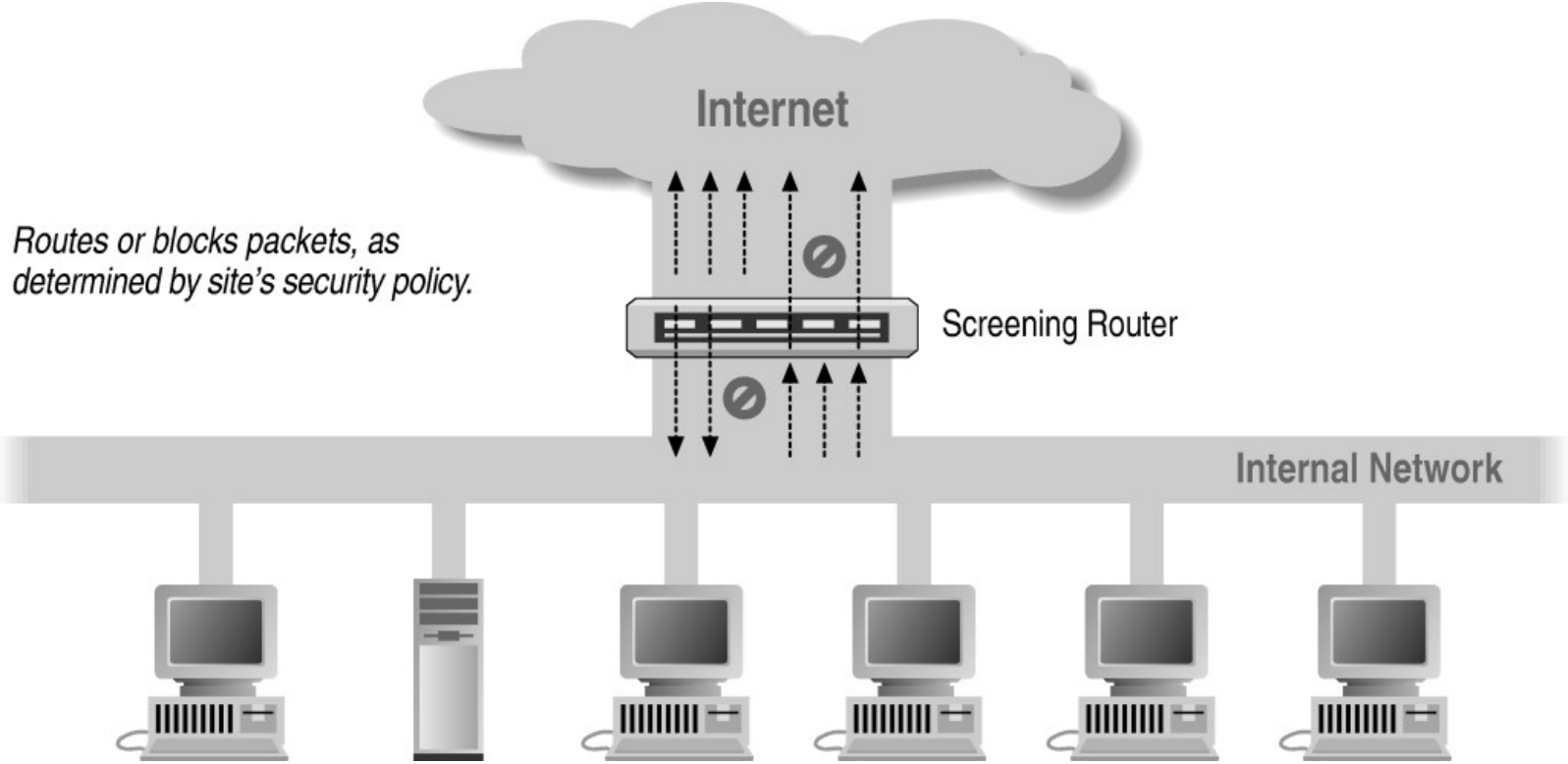

# Network Access Control Lists

- List the rights for accessing/using networks
  - Extensively used in switches, routers and firewalls
- Usually distinguish between incoming and outgoing traffic, per interface/port
  - Ex: lists of IP addresses that can send packets to an interface/port
- Stateless: every packet is treated independently, without any knowledge of what has come before

# Dual-homed host

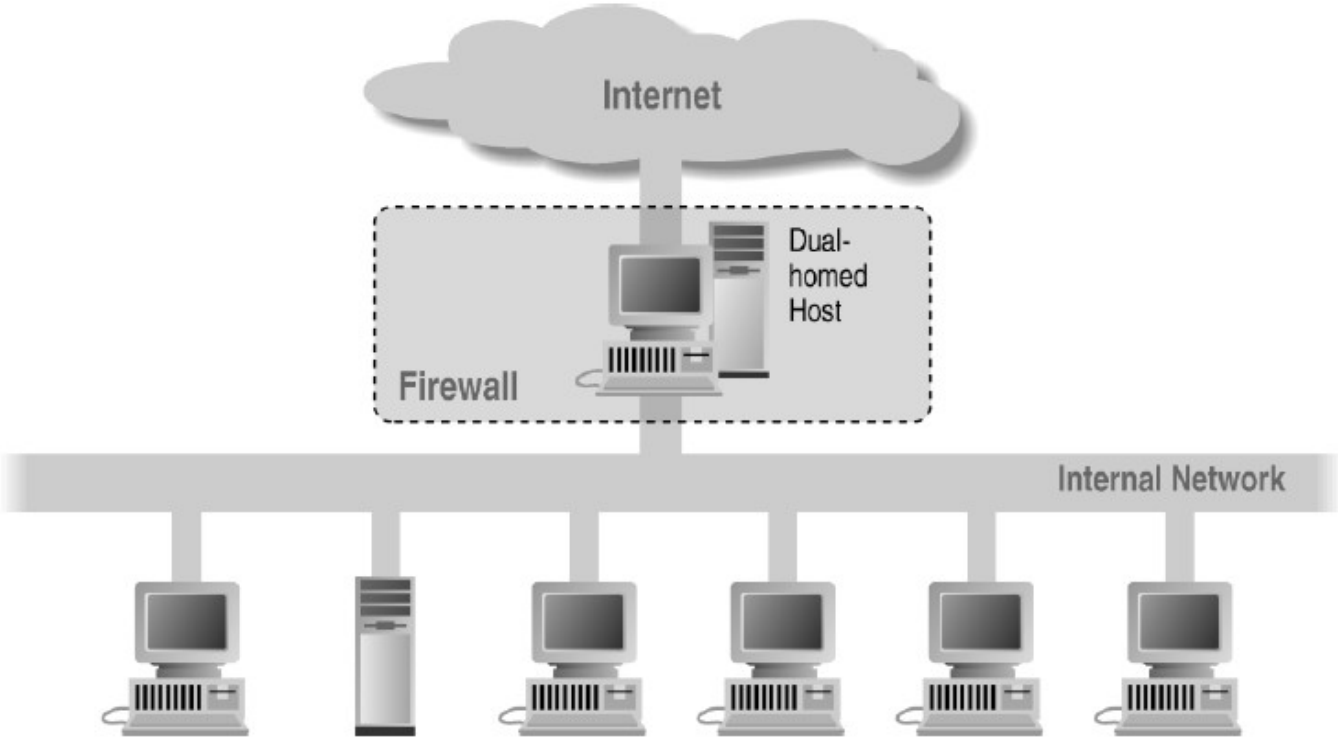

# Bastion host

- Hardened computer used to deal with all traffic coming to a protected network from outside
  - Hardening is the task of reducing or removing vulnerabilities in a computer system:
    - Shutting down unused or dangerous services
    - Strengthening access controls on vital files
    - Removing unnecessary accounts and permissions
    - Using "stricter" configurations for vulnerable components, such as DNS, sendmail, FTP, Apache, Tomcat, etc.
- Specially suitable for use as Application Proxy Gateways

# What is a DMZ

- DMZ (demilitarized zone)
  - Computer host or small network inserted as a "neutral zone" between a company's private network and the outside public network
  - Network construct that provides secure segregation of networks that host services for users, visitors, or partners
- DMZ use has become a necessary method of providing a multilayered, **defense-in-depth** approach to security
- Reduce and regulate the access to internal (private) components of the IT system

# Defense in depth

- A security approach in which IT systems are protected using **multiple overlapping** systems
  - Add redundancy to the defensive measures
  - Aim to remove the single point of failure
  - Find the right balance between complexity and multiplicity of defense measures
- In order to compromise the system, an attacker has to find multiple vulnerabilities, in different components

# DMZ as a screened Host

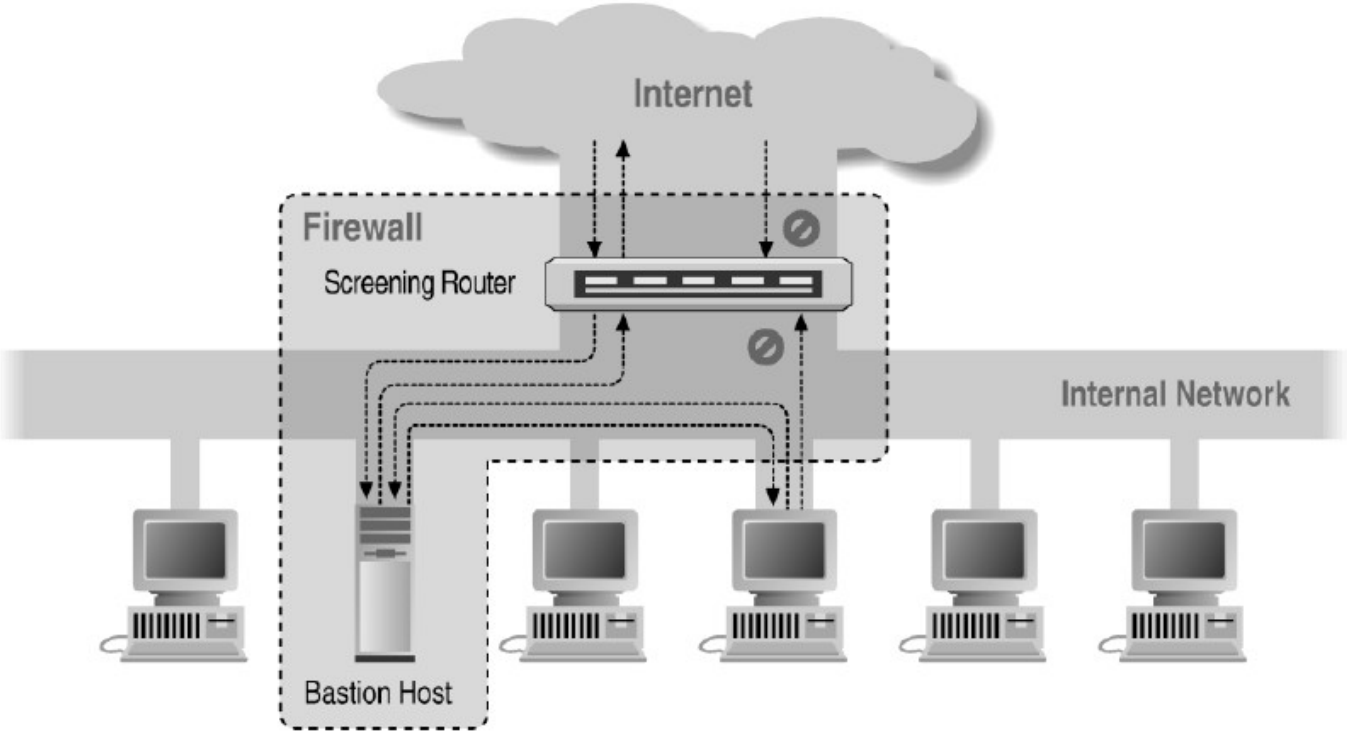

# Screened Subnet Using Two Routers/Firewalls

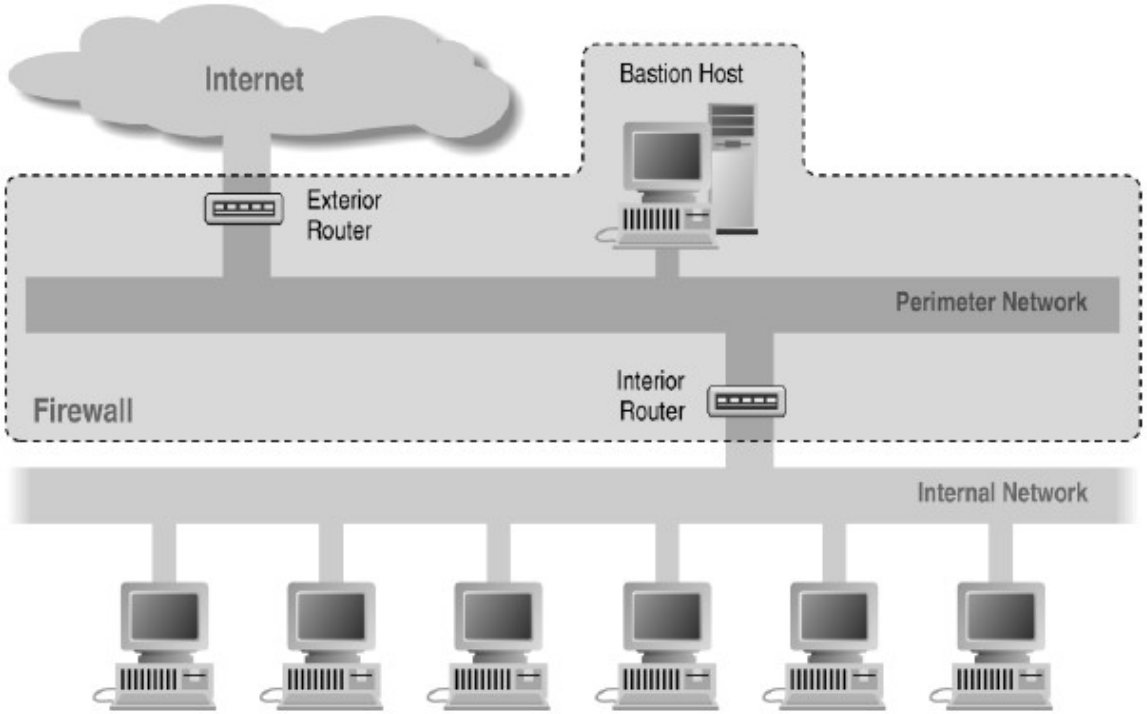

# DMZ to segment the network

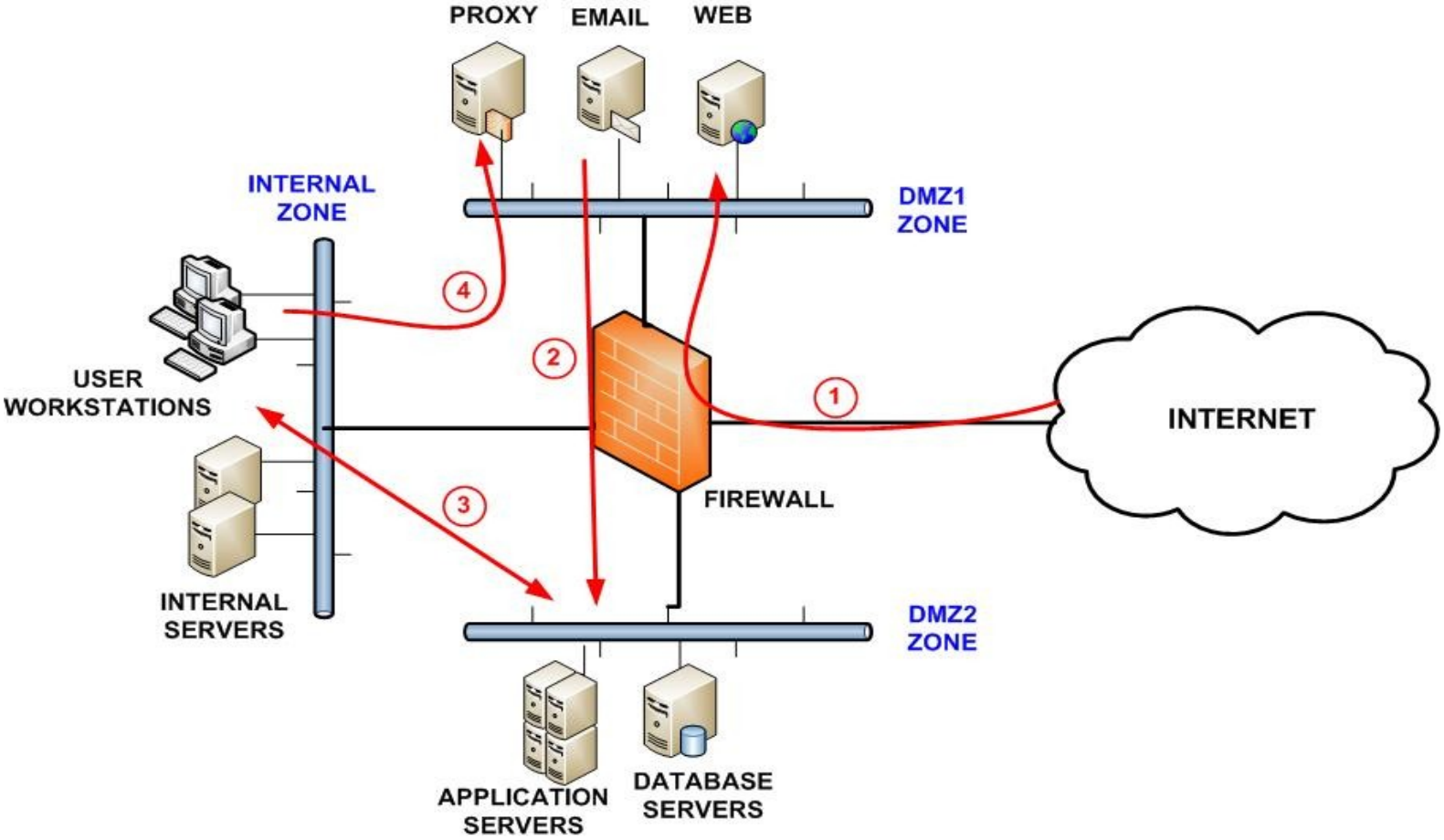

# Security in depth: split DMZ

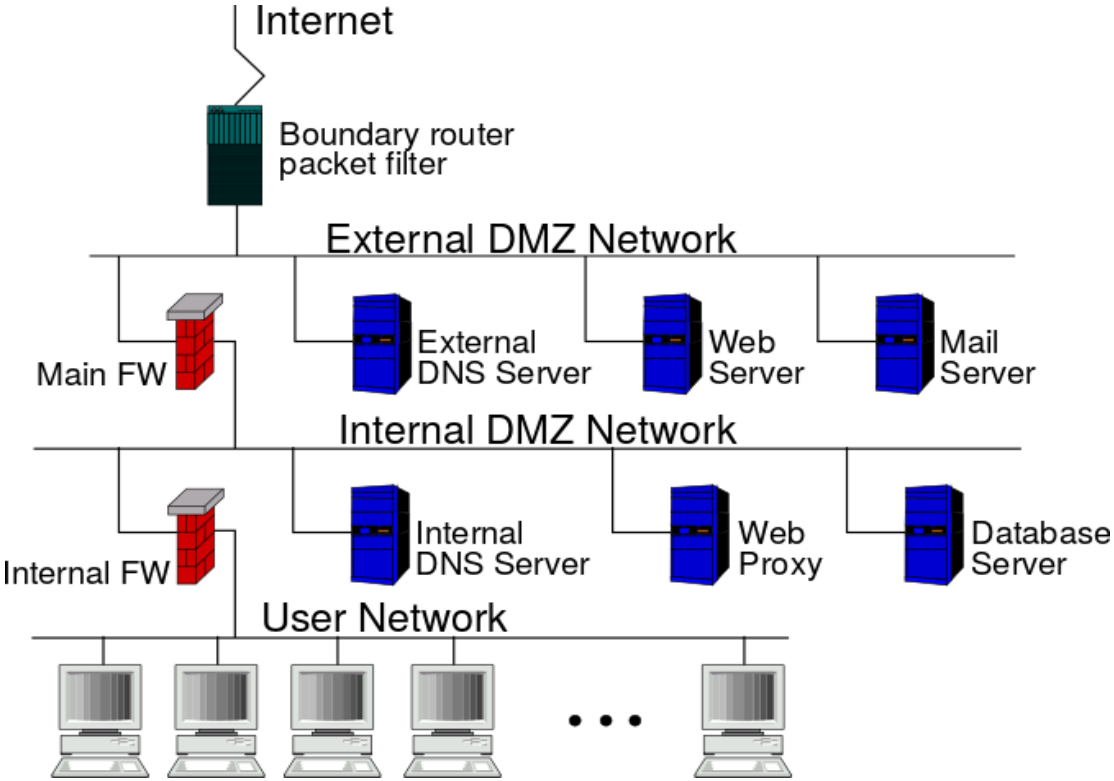

# A simple plan for network security

- Use a firewall to filter ingoing and outgoing traffic between "your" network (or individual PC) and the Internet

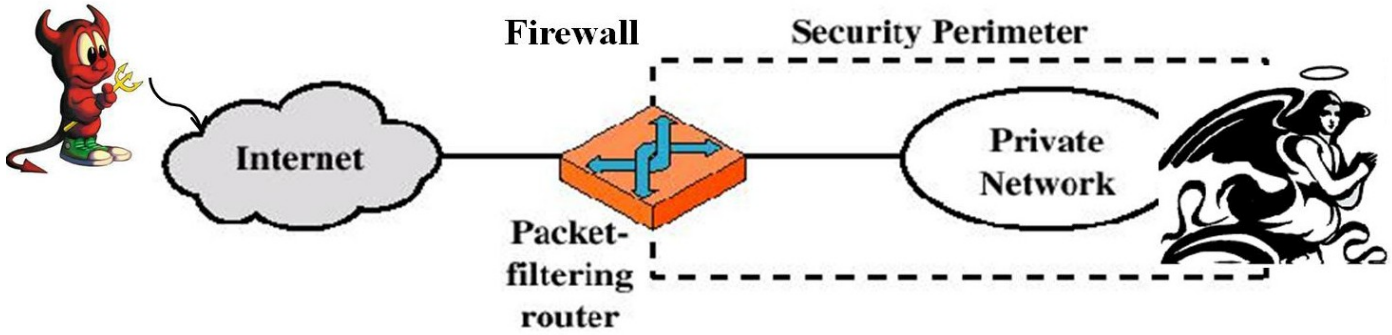

# Assumptions

1. You have security policy stating what is allowed and not allowed.
2. You can identify the "good" and the "bad" traffic by its IP-address, TCP port numbers, etc, ...
3. The firewall itself is immune to penetration.
   - A question of assurance – needs for a trusted system, secure OS etc.

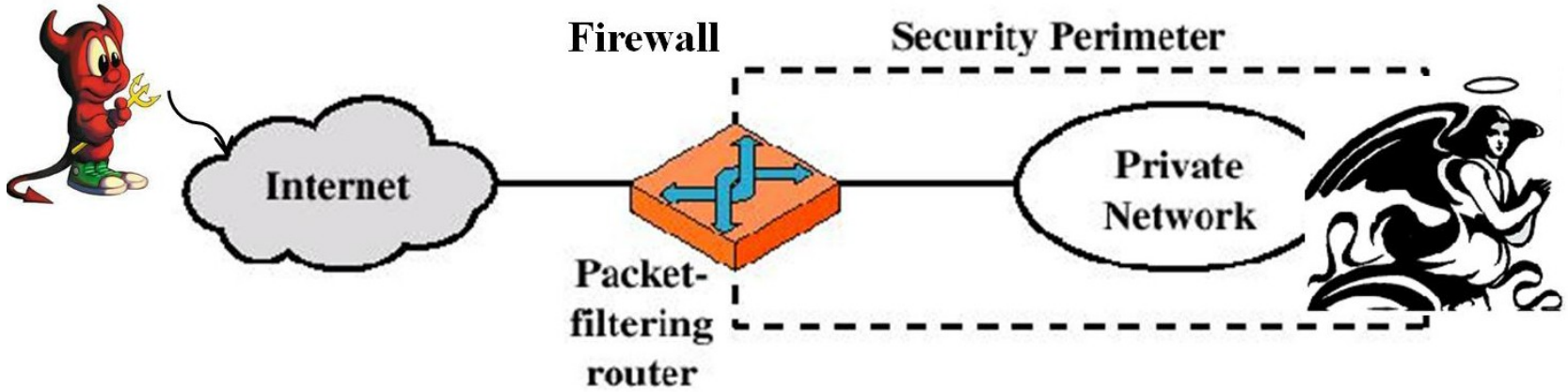

# Packet filters (stateless firewall)

- Drop packets based on their source or destination addresses or port numbers or flags
- No context, only contents
- Can operate on
  - incoming interface
  - outgoing interface
  - both
- Check packets with fake IP addresses:
  - from outside ("ingress filtering")
  - from inside ("egress filtering")

# Packet filters operating layers

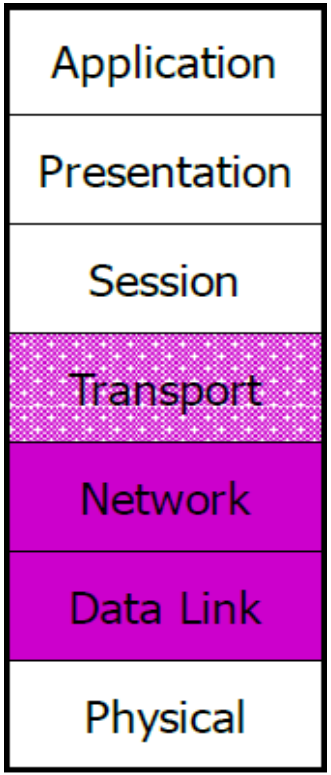


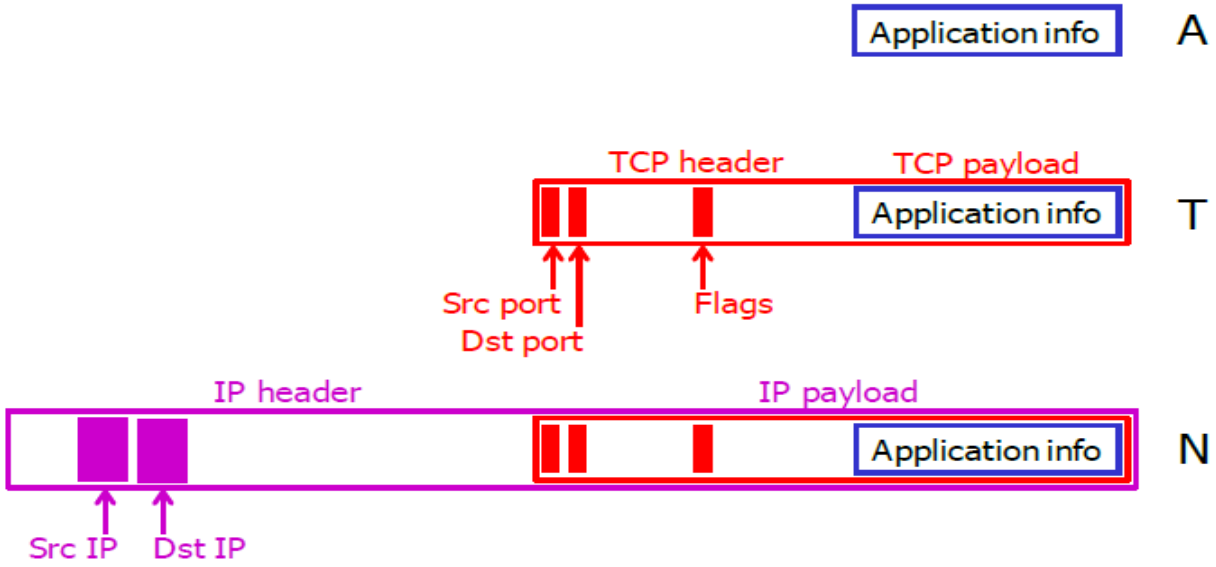

# Three-step process

1. Know your policy
2. Translate the policy in a formal language
   - E.g.: logical expression on packet fields
3. Rewrite the policy in terms of the firewall syntax

General mechanism:

- Rules are checked from top to bottom
- The first matching rule is applied
- One implicit rule is assumed if no rule matches
  - Block/Allow everything

| action | ourhost | port | theirhost | port | comment |
|---|---|---|---|---|---|
| block | * | * | * | * | *default* |

# Example

- Policy:
  - allow inbound email (SMTP, port 25) only to our-gateway machine: **`Mailgw`**
  - refuse all traffic from a known spamming site: **`demon`**
- Possible rules:

| action | ourhost | port | theirhost | port | comment |
|---|---|---|---|---|---|
| block | * | * | demon | * | *don't trust spammers* |
| allow | Mailgw | 25 | * | * | *connection to our SMTP* |

# Example, continued

- Add the policy:
  - any inside host can send mail to the outside

| action | ourhost | port | theirhost | port | comment |
|---|---|---|---|---|---|
| allow | * | * | * | 25 | *connection to their SMTP* |

- Very bad: we can not control the type of traffic originated from port 25 and coming from the outside
- Then: rules have to specify the <u>direction</u> of the traffic

# How to check the direction of TCP?

- Consider the TCP flags

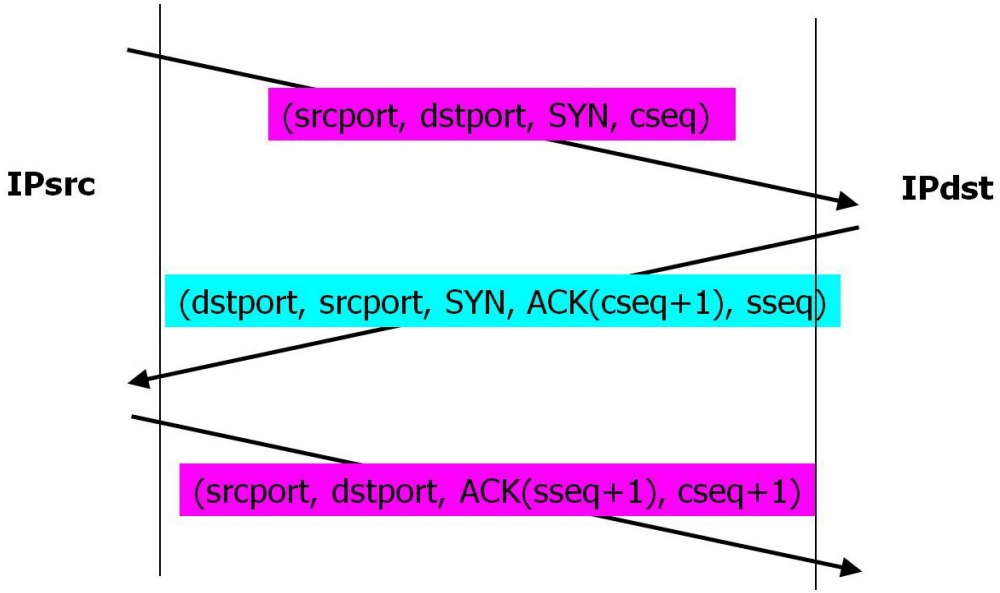

# Example with traffic direction

- We distinguish the replies to our SMTP connection considering the ACK flag

| action | src | port | dest | port | flags | comment |
|---|---|---|---|---|---|---|
| allow | {our hosts} | * | * | 25 | | *connection to their SMTP* |
| allow | * | 25 | * | * | ACK | *their replies* |
| block | * | * | * | * | | *default* |

- Very easy case…

# Filter rules for network firewalls

# More complex network topology

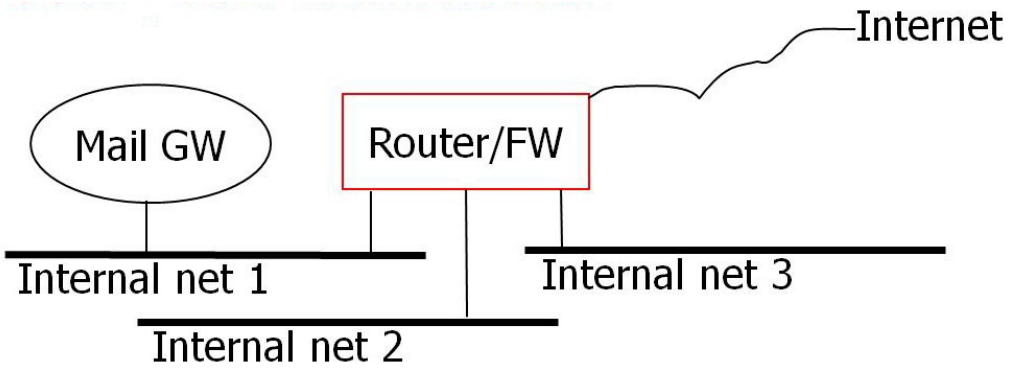


- Policy:
  - Internal Net 1 is a DMZ and only hosts Mail GW
  - Very limited connections between Mail GW and Internet (only partner servers)
  - Limited connections allowed between Mail GW and net 2 and net 3
  - Anything can pass between net 2 and net 3
  - Outgoing requests only between net 2 or net 3 and the link to the Internet

# Requirements

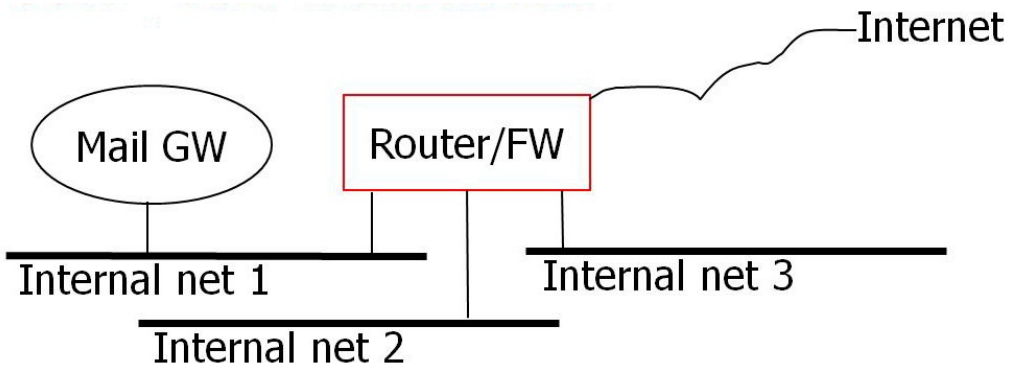


- We cannot only consider where packets have to go (destination→ **egress filtering**)
  - Open access to net 2 only allowed for traffic with source address in net 3
  - No way to avoid fake source addresses (*address spoofing*) from outside
- We need to define rules based on **from where packets are arriving,** (source → **ingress filtering**)

# Interface towards Internet

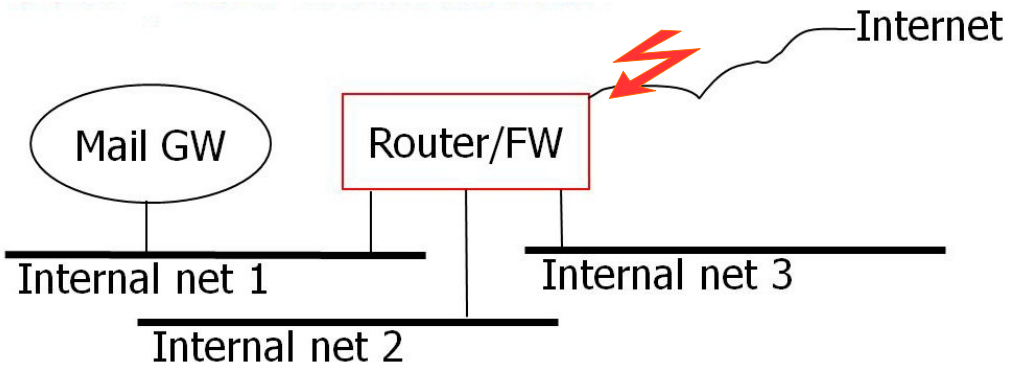


| Action | IPsrc | srcport | IPdst | dstport | flags |
|---|---|---|---|---|---|
| block | "Net 1" | * | * | * | |
| block | "Net 2" | * | * | * | |
| block | "Net 3" | * | * | * | |
| allow | * | * | GW | 25 | |
| allow | * | * | "Net 2" | * | ACK |
| allow | * | * | "Net 3" | * | ACK |

# Interface on net 1

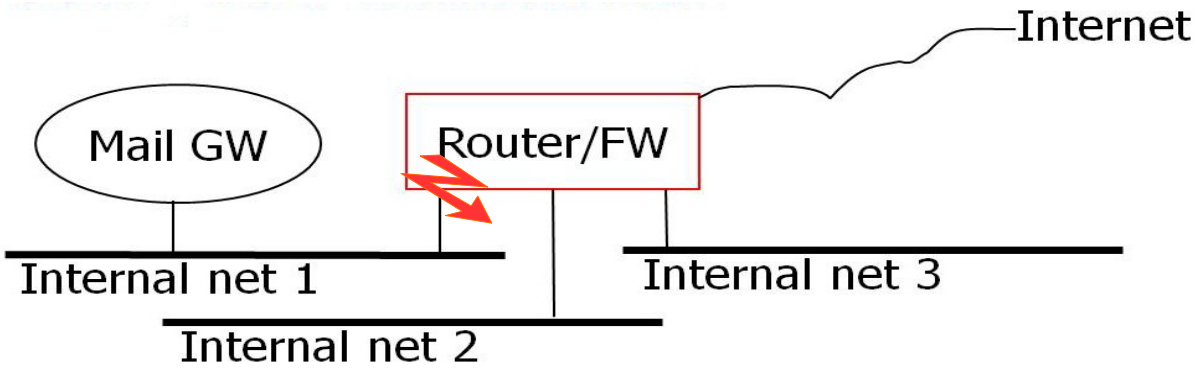


| Action | IPsrc | srcport | IPdst | dstport | flags |
|---|---|---|---|---|---|
| allow | GW | * | "partners" | 25 | |
| allow | GW | * | "Net 2" | * | ACK |
| allow | GW | * | "Net 3" | * | ACK |
| block | GW | * | "Net 2" | * | |
| block | GW | * | "Net 3" | * | |
| allow | GW | * | * | * | |

# Interface on net 2 (net 3 is similar)

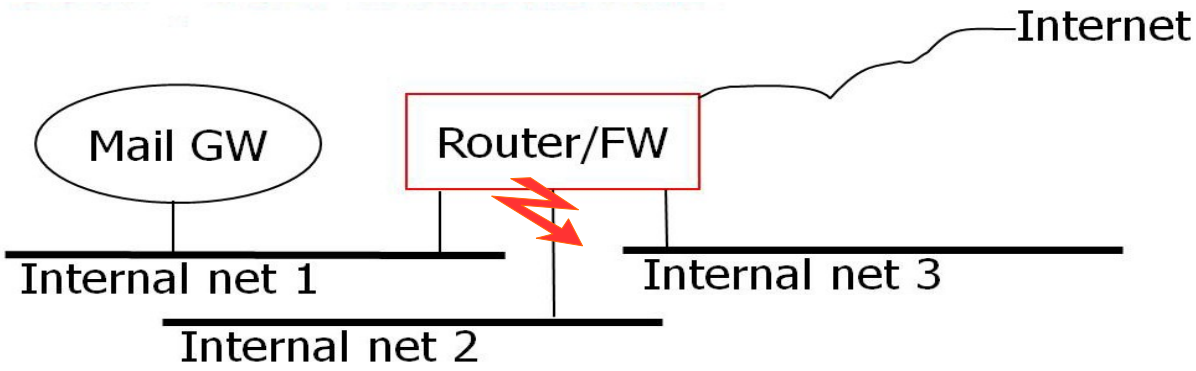


| action | IPsrc | srcport | IPdst | dstport | flags |
|---|---|---|---|---|---|
| allow | “Net 2” | * | * | * | |
| block | * | * | * | * | |

# Problems with Packet Filters

- Only a small number of parameters
  - it is (unfortunately) easy to specify filtering rules which are too specific or too general
- Payload of TCP packet is not inspected
  - No protection against attacks based on upper-layer vulnerabilities
- Limited logging ability (restricted to the few parameters used by the filter)
- No authentication facilities
- Susceptible to attacks based on vulnerabilities in various implementations of TCP and/or IP

# Filter rules, 1

- Example: Filtering in- and outgoing SMTP traffic. Try rules:

| Rule | In/out | IPsrc | IPdst | Proto | dstport | Action |
|---|---|---|---|---|---|---|
| A | Inward | External | Internal | TCP | 25 | Allow |
| B | Outward | Internal | External | TCP | >1023 | Allow |
| C | Outward | Internal | External | TCP | 25 | Allow |
| D | Inward | External | Internal | TCP | >1023 | Allow |
| E | * | * | * | * | * | Block |

- Scenario:

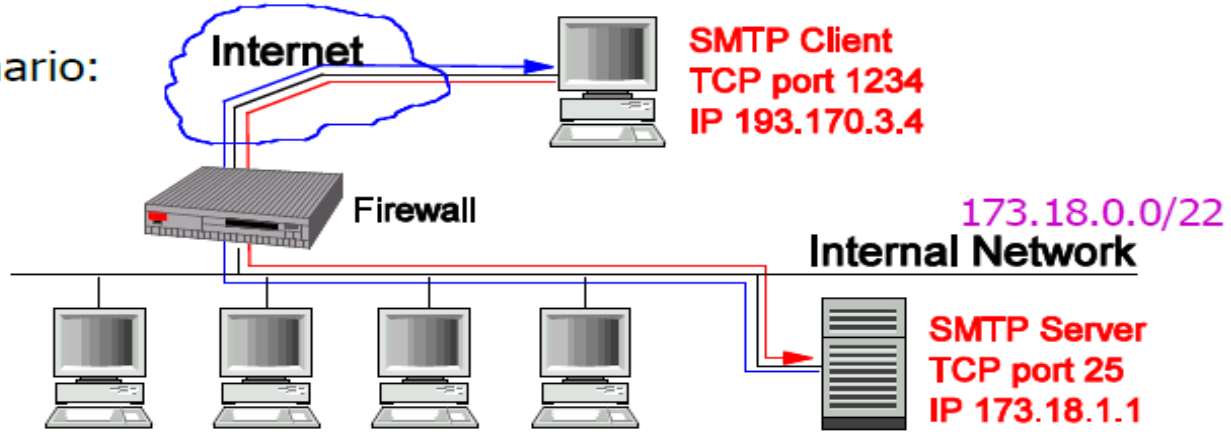

# Filter rules, 2

- Example: Filtering in- and outgoing SMTP traffic. Try rules:

| Rule | In/out | IPsrc | IPdst | Proto | dstport | Action |
|---|---|---|---|---|---|---|
| A | Inward | External | Internal | TCP | 25 | Allow |
| B | Outward | Internal | External | TCP | >1023 | Allow |
| C | Outward | Internal | External | TCP | 25 | Allow |
| D | Inward | External | Internal | TCP | >1023 | Allow |
| E | * | * | * | * | * | Block |

- Scenario:

| Packet | In/out | IPsrc | IPdst | Proto | dstport | Action |
|---|---|---|---|---|---|---|
| 1 | Inward | 193.170.3.4 | 173.18.1.1 | TCP | 25 | Allow (A) |
| 2 | Outward | 173.18.1.1 | 193.170.3.4 | TCP | 1234 | Allow (B) |

- Conclusion: This looks OK!

# Filter rules, 3

- Example: Filtering in- and outgoing SMTP traffic. Try rules:

| Rule | In/out | IPsrc | IPdst | Proto | dstport | Action |
|---|---|---|---|---|---|---|
| A | Inward | External | Internal | TCP | 25 | Allow |
| B | Outward | Internal | External | TCP | >1023 | Allow |
| C | Outward | Internal | External | TCP | 25 | Allow |
| D | Inward | External | Internal | TCP | >1023 | Allow |
| E | * | * | * | * | * | Block |

- Scenario 2:

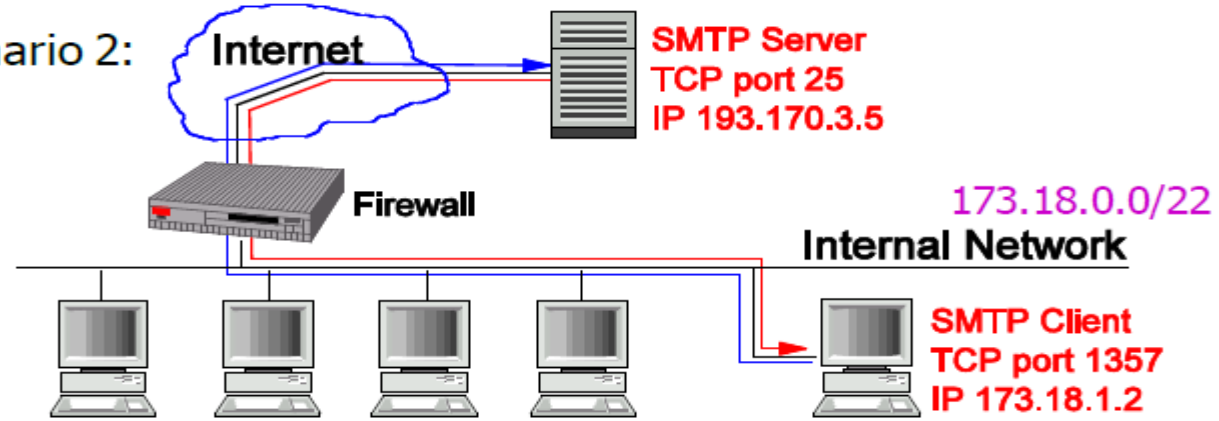

# Filter rules, 4

- Example: Filtering in- and outgoing SMTP traffic. Try rules:

| Rule | In/out | IPsrc | IPdst | Proto | dstport | Action |
|---|---|---|---|---|---|---|
| A | Inward | External | Internal | TCP | 25 | Allow |
| B | Outward | Internal | External | TCP | >1023 | Allow |
| C | Outward | Internal | External | TCP | 25 | Allow |
| D | Inward | External | Internal | TCP | >1023 | Allow |
| E | * | * | * | * | * | Block |

- Scenario 2:

| Packet | In/out | IPsrc | IPdst | Proto | dstport | Action |
|---|---|---|---|---|---|---|
| 3 | Outward | 173.18.1.2 | 193.170.3.5 | TCP | 25 | Allow (C) |
| 4 | Inward | 193.170.3.5 | 173.18.1.2 | TCP | 1357 | Allow (D) |

- Conclusion: This also looks OK!

# Filter rules, 5

- Example: Filtering in- and outgoing SMTP traffic. Try rules:

| Rule | In/out | IPsrc | IPdst | Proto | dstport | Action |
|---|---|---|---|---|---|---|
| A | Inward | External | Internal | TCP | 25 | Allow |
| B | Outward | Internal | External | TCP | >1023 | Allow |
| C | Outward | Internal | External | TCP | 25 | Allow |
| D | Inward | External | Internal | TCP | >1023 | Allow |
| E | * | * | * | * | * | Block |

- Scenario 3:

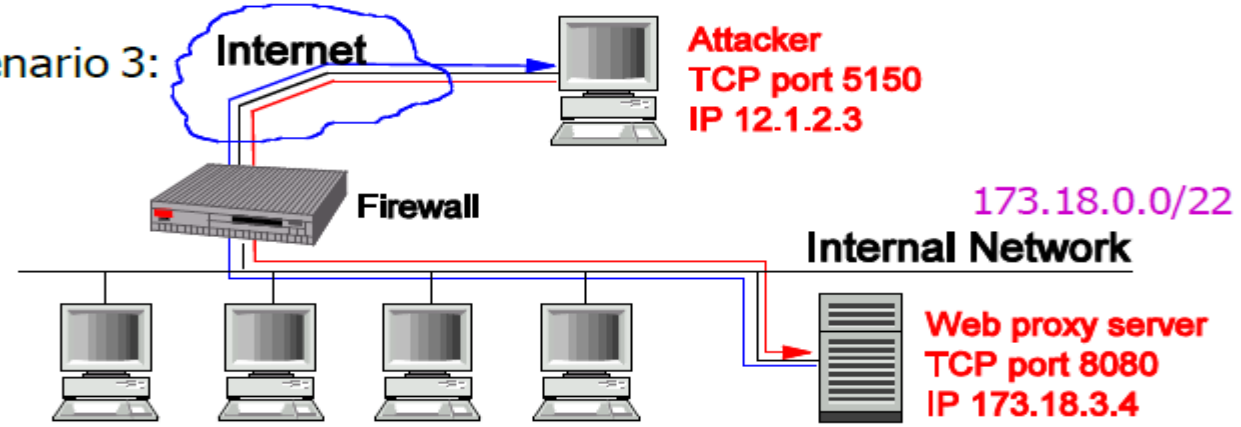

# Filter rules, 6

- Example: Filtering in- and outgoing SMTP traffic. Try rules:

| Rule | In/out | IPsrc | IPdst | Proto | dstport | Action |
|---|---|---|---|---|---|---|
| A | Inward | External | Internal | TCP | 25 | Allow |
| B | Outward | Internal | External | TCP | >1023 | Allow |
| C | Outward | Internal | External | TCP | 25 | Allow |
| D | Inward | External | Internal | TCP | >1023 | Allow |
| E | * | * | * | * | * | Block |

- Scenario 3:

| Packet | In/out | IPsrc | IPdst | Proto | dstport | Action |
|---|---|---|---|---|---|---|
| 5 | Inward | 12.1.2.3 | 173.18.3.4 | TCP | 8080 | Allow (D) |
| 6 | Outward | 173.18.3.4 | 12.1.2.3 | TCP | 5150 | Allow (B) |

- Conclusion: Oh, dear! That doesn't look good at all!
- Rules allow all connections where both ends use ports >1023.

# Filter rules, 7

- Filtering in- and outgoing SMTP traffic. Include srcport in rules:

| Rule | In/out | Ipsrc | IPdst | Proto | **srcport** | dstport | Action |
|---|---|---|---|---|---|---|---|
| A | Inward | External | Internal | TCP | **>1023** | 25 | Allow |
| B | Outward | Internal | External | TCP | **25** | >1023 | Allow |
| C | Outward | Internal | External | TCP | **>1023** | 25 | Allow |
| D | Inward | External | Internal | TCP | **25** | >1023 | Allow |
| E | * | * | * | * | * | | Block |

- Scenario 3:

| Packet | In/out | Ipsrc | IPdst | Proto | srcport | dstport | Action |
|---|---|---|---|---|---|---|---|
| 5 | Inw. | 12.1.2.3 | 173.18.3.4 | TCP | 5150 | 8080 | Deny (E) |
| 6 | Outw. | 173.18.3.4 | 12.1.2.3 | TCP | 8080 | 5150 | Deny (E) |

- Conclusion: This looks OK again!
- Check for yourselves that packets 1, 2, 3, 4 are treated OK.

# Filter rules, 8

- Filtering in- and outgoing SMTP traffic. Include srcport in rules:

| Rule | In/out | IPsrc | IPdst | Proto | srcport | dstport | Action |
|---|---|---|---|---|---|---|---|
| A | In | External | Internal | TCP | >1023 | 25 | Allow |
| B | Out | Internal | External | TCP | 25 | >1023 | Allow |
| C | Out | Internal | External | TCP | >1023 | 25 | Allow |
| D | In | External | Internal | TCP | 25 | >1023 | Allow |
| E | * | * | * | * | * | | Block |

- Scenario 4:

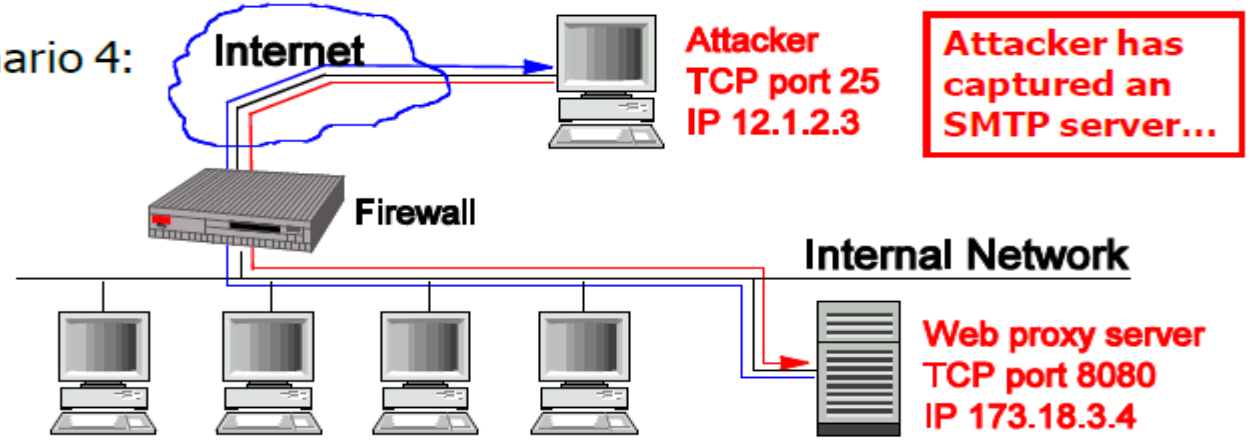

# Filter rules, 9

- Filtering in- and outgoing SMTP traffic. Include srcport in rules:

| Rule | In/out | IPsrc | IPdst | Proto | **srcport** | dstport | Action |
|---|---|---|---|---|---|---|---|
| A | Inward | External | Internal | TCP | **>1023** | 25 | Allow |
| B | Outward | Internal | External | TCP | **25** | >1023 | Allow |
| C | Outward | Internal | External | TCP | **>1023** | 25 | Allow |
| D | Inward | External | Internal | TCP | **25** | >1023 | Allow |
| E | * | * | * | * | * | | Block |

- Scenario 4:

| Packet | In/out | IPsrc | IPdst | Proto | srcport | dstport | Action |
|---|---|---|---|---|---|---|---|
| 7 | Inw. | 12.1.2.3 | 173.18.3.4 | TCP | 25 | 8080 | Allow (D) |
| 8 | Outw. | 173.18.3.4 | 12.1.2.3 | TCP | 8080 | 25 | Allow (C) |

- Conclusion: This looks bad again!
- Need yet more information (e.g. Flags) to get desired effect: Rules B and D must require ACK flag to be set in order to accept packet.

# IP fragmentation

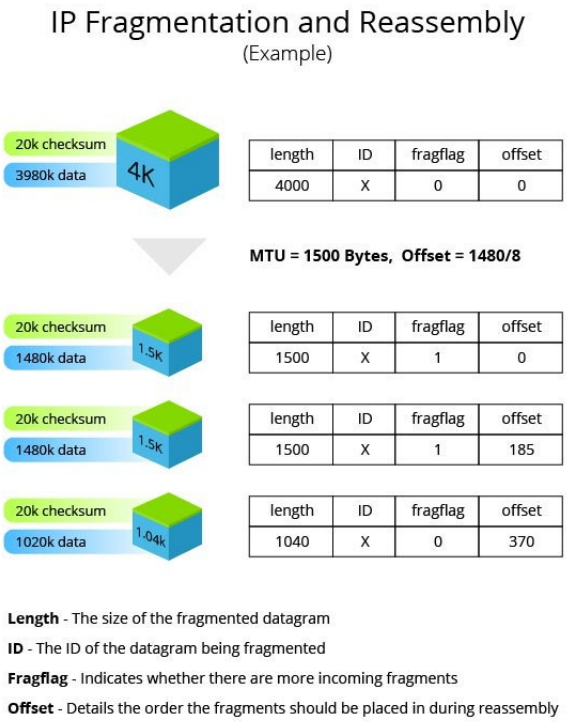


https://www.incapsula.com/ddos/attack-glossary/ip-fragmentation-attack-teardrop.html

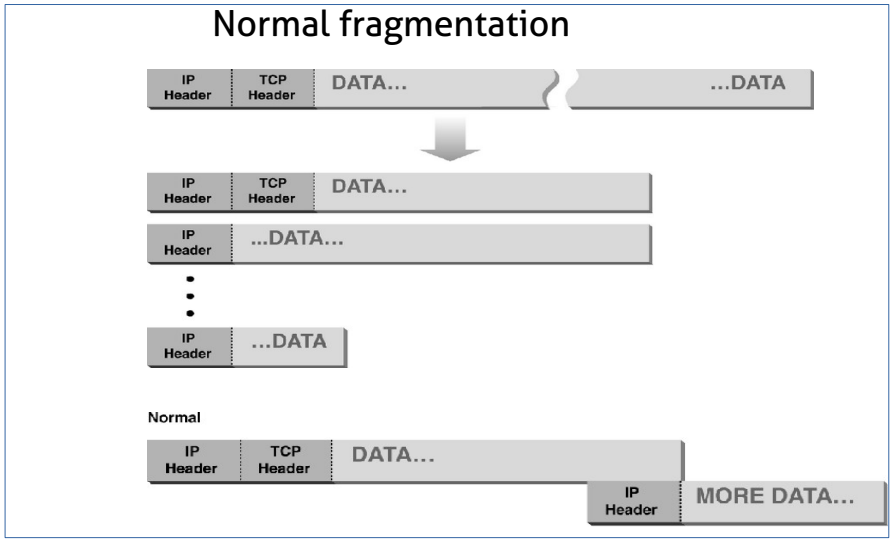


Abnormal fragmentation

# Incoming TCP connections with IP frag

- Firewall blocks any incoming TCP connection
- ACK packet is allowed for outgoing packets
- Internal host reassembles a packet with the SYN bit set because two fragment offsets are chosen in order to set the SYN bit
- Attacks
  - SYN scan
  - Create TCP connection
  - SYN flood - DoS

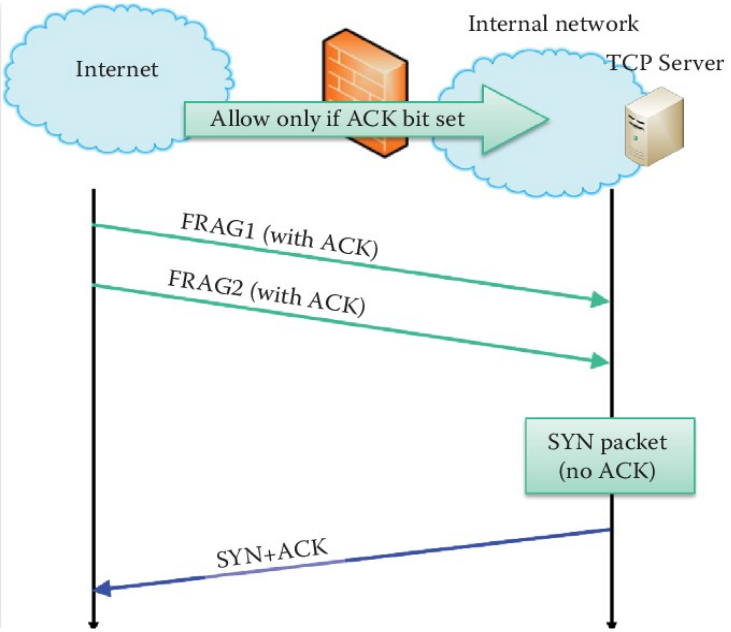

# Stateful firewalls

# Stateful packet inspection

- Stateful Inspection Firewalls (or Dynamic Packet Filters) can keep track of established connections
- Can drop packets based on their source or destination IP addresses, port numbers and possibly TCP flags
  - Solve one major problem of simple packet filters, since they can check that incoming traffic for a high-numbered port is a genuine response to a previous outgoing request to set up a connection

# Stateful firewall

- Considered layers

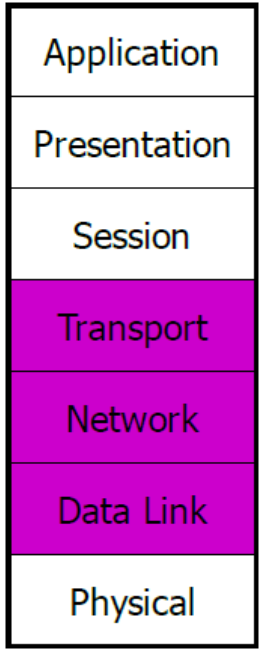


- Connection tracking

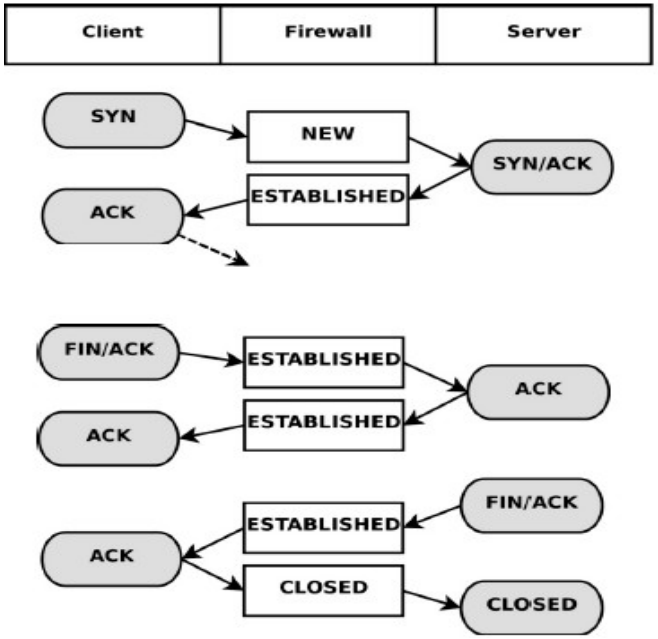

# Connection tracking

Considered TCP States

- Setting up connection:
  - client calls from (high-numbered) port to port for application on server
  - server replies to (high-numbered) port on client
  - connection is considered established when the server gives correct SYN/ACK response.
- Closing connection:
  - both parties have to close the connection by sending a TCP packet with FIN flag set before connection is considered closed

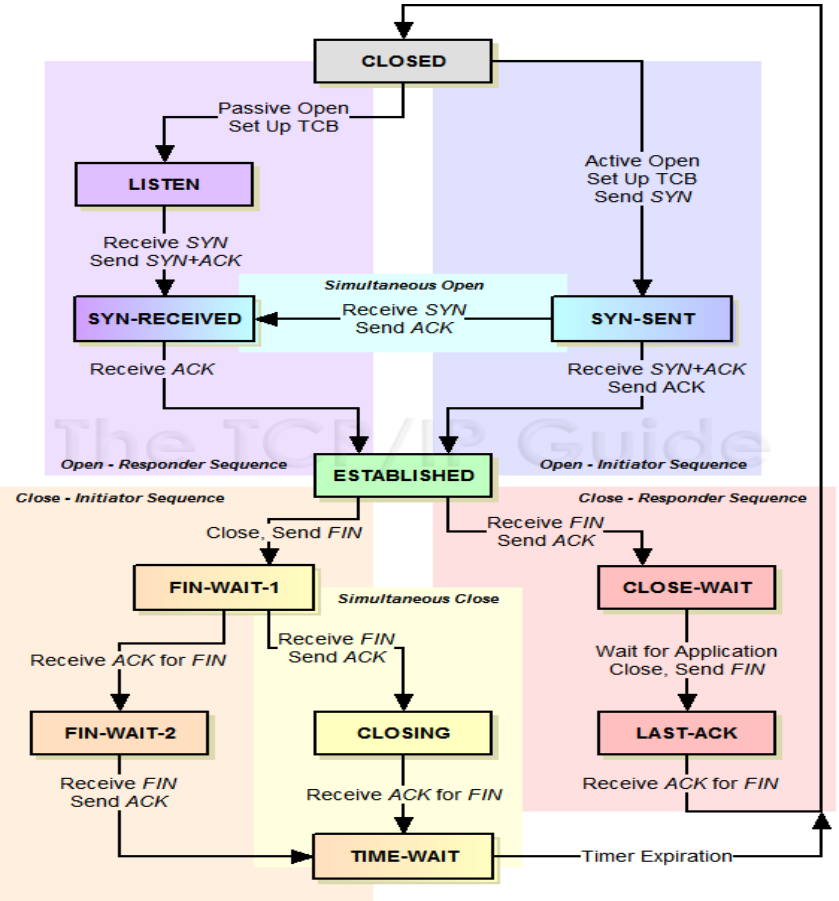

# Stateful firewall example

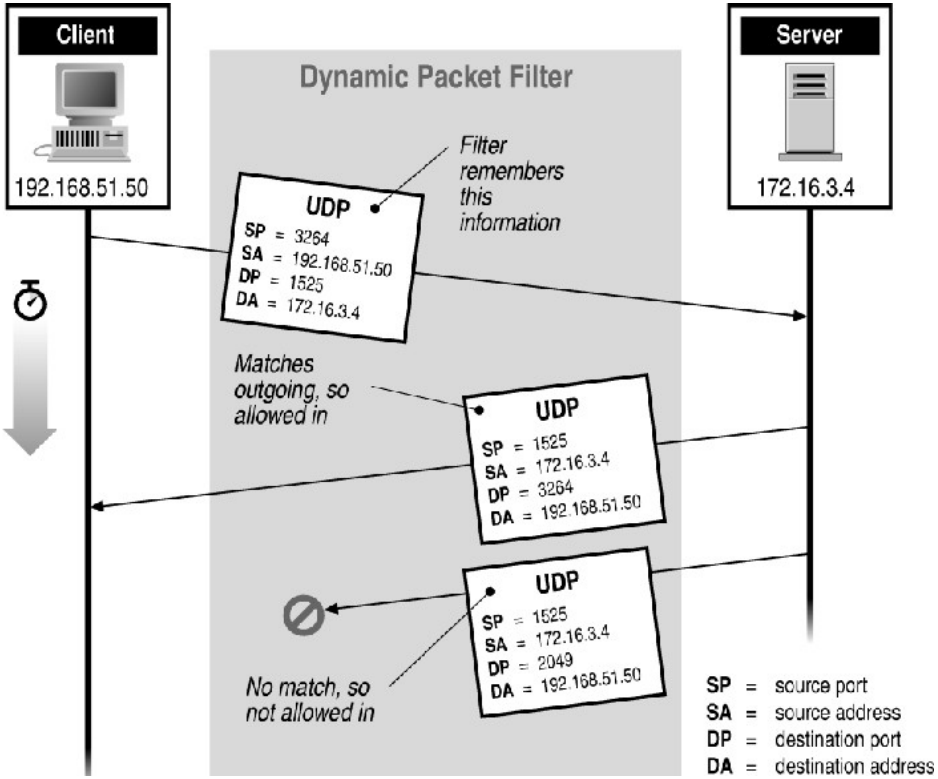

# Other types of firewalls

# Application-Level filtering (proxy-like)

- Deal with the details of services
- Need a separate special-purpose mechanism for each application
  - Example: mail filters, FTP, HTTP proxy
  - Big overhead, but can log and audit all activity
- Can support user-to-gateway authentication
  - Log into the proxy server with username and password
  - Example: Microsoft ISA, SQUID

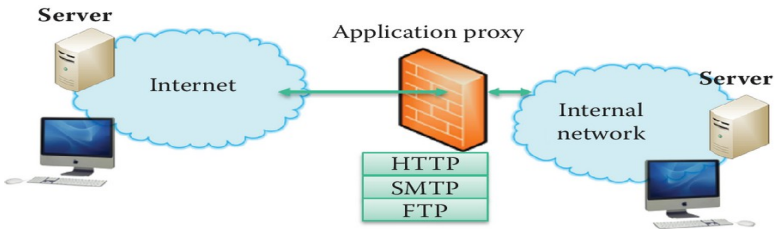

# Host based firewalls

- A firewall on each individual host to protect that one machine
- Selectively enable specific services and ports that will be used to send and receive traffic
  - Ex: it's unlikely that an employee would need remote SSH access to her laptop
- A host-based firewall plays a big part in:
  - reducing what is accessible to an outside attacker
  - protecting the other elements of the IT system if one of the component (ex, a process) is compromised

# Application-level firewall pro and cons

- + Logging capacity
- + Intelligent filtering
- + User-level authentication
- + Protection from wrong implementations
- - Can introduce lag
- - Application-specific
- - Not always transparent

# Circuit-level gateways (or generic proxy)

- Also known as a TCP relay
  - Able to deal with several protocols
- SOCKS (v5.0: Internet RFC1928) is the de facto standard
  - It also works with UDP
  - WinSock for Windows
- SOCKS performs at Layer 5 of the OSI model
  - The Session Layer above transport layer
    - TOR (the onion routing): socks-like interface
- The client connect to a proxy that relays its connections in a protocol-independent manner
- Provide user-authentication
- Usually no content filtering

# TCP relay

- Splices and relays TCP connections
  - Does not examine the contents of TCP segments
  - Can use ACL (like packet filtering, i.e. dst IP/dst port)
  - Less control than application-level gateway
- Client applications must be adapted for SOCKS
  - "Universal" interface to circuit-level gateways
- Example: ssh -D 12345 <remote_host>
  - More on this when talking about tunneling

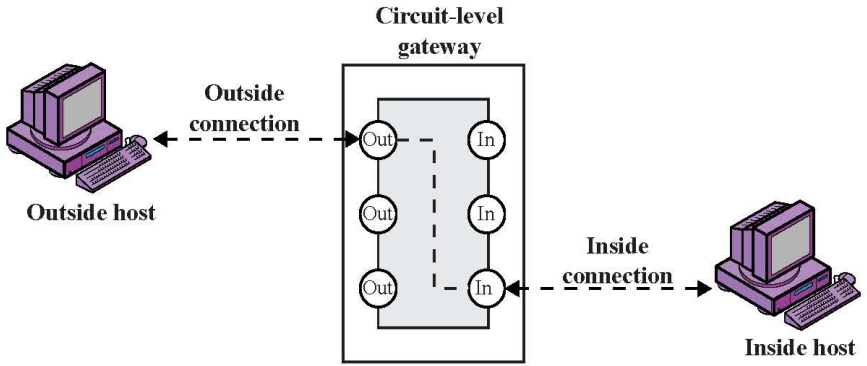

# Common firewall weaknesses

- No content inspection causes the problems
  - Software weakness (e.g. buffer overflow, and SQL injection exploits)
  - Protocol weakness (WEP in 802.11)
- No defense against
  - Denial of service
  - Insider attacks
- Firewall failure has to be prevented
  - Firewall cluster for redundancy

# NG-Firewalls

- Next Generation firewalls try to include additional features
- Not only traffic filtering, but also:
  - Intrusion Detection System
  - VPN gateway
  - Deep Packet Inspection
  - Traffic shaping

# Summary!

# Summary

- Traffic regulation: routers and firewall
  - Decide the packets that can pass through the node
- Firewall architectures: where they go in the network?
  - Network segmentation and DMZ
- Types of firewalls:
  - Host firewall, stateless, stateful, application-gateway, circuit-gateway
- Stateless firewall weaknesses
  - No state, IP fragmentation

# That's all for today

- **Questions?**
- See you next lecture!
- Resources:
  - "Building internet firewalls", Elizabeth D. Zwicky, Simon Cooper, D. Brent Chapman, O'Reilly 2nd ed. (old but still very useful for educational purposes)
    - https://docstore.mik.ua/orelly/networking_2ndEd/fire/index.htm
  - "Firewalls and Internet security: repelling the wily hacker", William R. Cheswick, Steven M. Bellovin, Aviel D. Rubin, Addison-Wesley 2nd ed.